CLOSED BODY SWIVEL JAW JAW

Material	:	High tensile steel
Safety Factor	:	5 times SWL
Finish	:	Painted
Temperature Range	:	-4°F up to 356°F
Standard Certification	:	Certificate of Conformity Proof Load Certificate

Upon request also available for underwater use.

Non-standard sizes or custom products available on request.



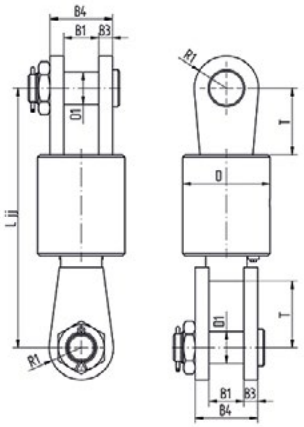

SWL	Art. nr.	B1	B3	B4	D1	D	L jj	R1	T	Weight
USt	painted	inch								lbs
18,7	CBS017JJ	2 ⅝	1 ⅛	4 ¹³⁄₁₆	2 ½	6 ²³⁄₃₂	18 ²⁹⁄₃₂	2 ¹³⁄₁₆	5 ⅛	130,1
27,6	CBS025JJ	3	1 ⁷⁄₃₂	5 ⁷⁄₁₆	2 ¹³⁄₁₆	7 ½	22 ⁷⁄₃₂	2 ¹³⁄₁₆	5 ²³⁄₃₂	185,2
38,6	CBS035JJ	3 ½	1 ⅝	6 ²³⁄₃₂	3 ⅛	9 ¹³⁄₁₆	27 ⁷⁄₃₂	3 ⁄₁₀	6 ²⁹⁄₃₂	370,4
60,6	CBS055JJ	4 ⅝	2	8 ⅝	3 ²⁹⁄₃₂	10 ⅝	31 ½	4 ⅛	6 ²⁹⁄₃₂	604,1
77,2	CBS070JJ	4 ⅝	2 ⁷⁄₃₂	8 ²³⁄₃₂	4 ⅜	11 ⁷⁄₁₆	31 ²⁹⁄₃₂	4 ½	6 ²³⁄₃₂	712,1
93,7	CBS085JJ	5 ⅛	3	11	5	13 ¹³⁄₁₆	34 ⅝	5 ⅝	6 ²⁹⁄₃₂	1166,2
132,3	CBS120JJ	6 ⅛	3 ½	13 ⁷⁄₃₂	6	16 ²⁹⁄₃₂	35	6 ²³⁄₃₂	7 ½	1876,1
165,3	CBS150JJ	6 ²³⁄₃₂	3 ²⁹⁄₃₂	14 ⅝	7	18 ½	39 ½	7 ½	8 ⅝	2579,4
220,5	CBS200JJ	7 ½	4 ⅝	16 ⅛	7 ½	20 ²⁹⁄₃₂	45 ⅝	8 ²³⁄₃₂	9 ¹³⁄₁₆	3805,2
275,6	CBS250JJ	8 ⅝	4 ²³⁄₃₂	17 ²³⁄₃₂	9 ¹³⁄₁₆	23 ⅝	48 ¹³⁄₁₆	10 ⁷⁄₃₂	11	5703,4
330,7	CBS300JJ	9 ¹³⁄₁₆	6 ²⁹⁄₃₂	23 ⅝	11 ⁷⁄₁₆	29 ½	53 ⅛	11 ¹³⁄₁₆	11 ¹³⁄₁₆	9524,0