CLOSED BODY SWIVEL JAW JAW

Material	:	High tensile steel
Safety Factor	:	5 times SWL
Finish	:	Painted
Temperature Range	:	-20°C up to +180°C
Standard Certification	:	Certificate of Conformity Proof Load Certificate

Upon request also available for underwater use.

Non-standard sizes or custom products available on request.



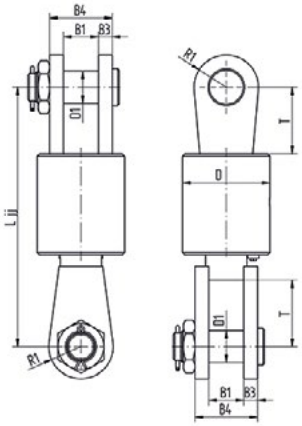

SWL	Art. nr.	B1	B3	B4	D1	D	L jj	R1	T	Weight
tons	painted	mm								kg ±
17	CBS017JJ	65	28	121	63	170	480	70	130	59
25	CBS025JJ	76	30	136	70	190	565	70	145	84
35	CBS035JJ	90	40	170	80	250	690	85	175	168
55	CBS055JJ	110	50	210	100	270	800	105	175	274
70	CBS070JJ	110	55	220	108	290	810	115	170	323
85	CBS085JJ	130	75	280	127	350	870	135	175	529
120	CBS120JJ	155	90	335	152	430	890	170	190	851
150	CBS150JJ	170	100	370	178	470	1003	190	210	1170
200	CBS200JJ	190	110	410	190	530	1150	220	250	1726
250	CBS250JJ	210	120	450	250	600	1240	260	280	2587
300	CBS300JJ	250	175	600	290	750	1350	300	300	4320